ADAPTER TO ACCEPT STANDARD FLANGED MOTOR FITTED

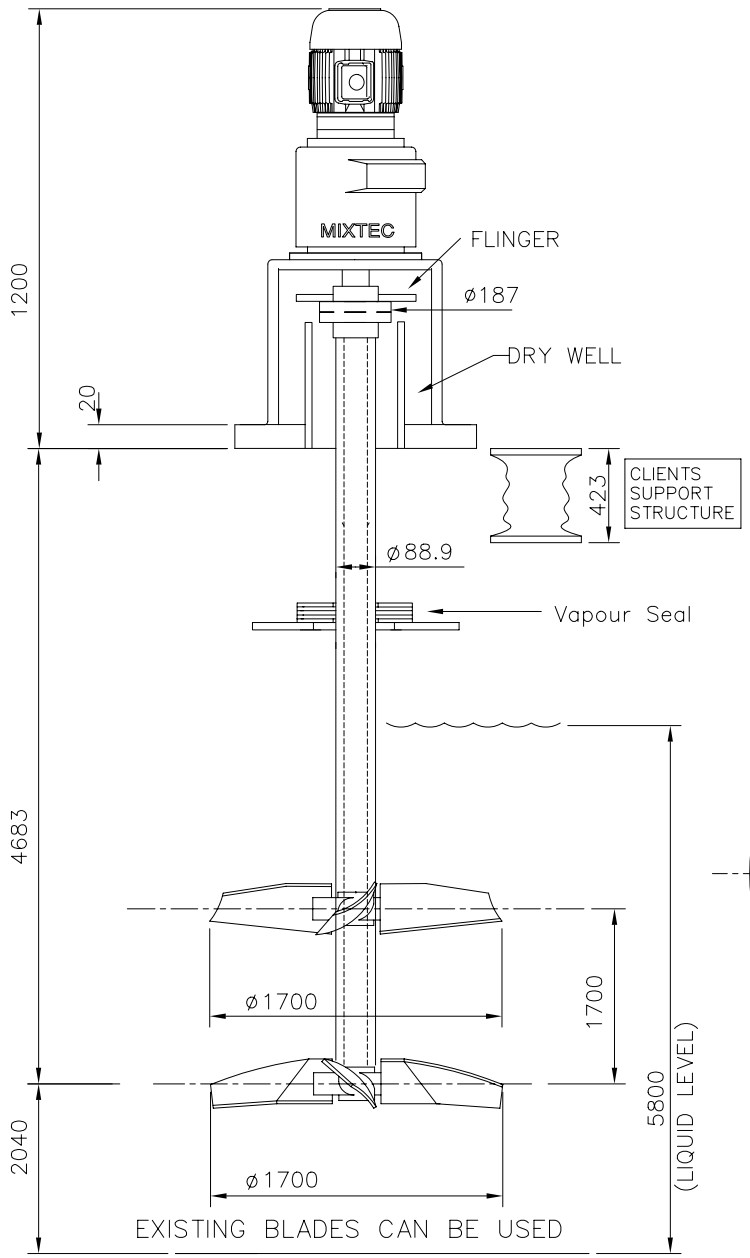

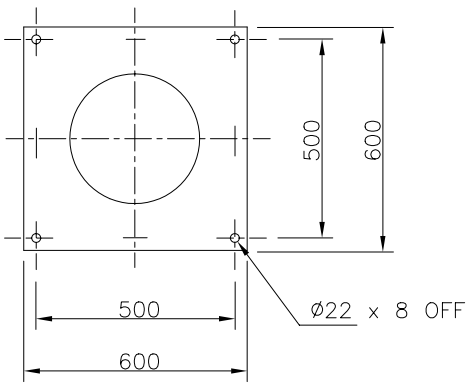

BASEPLATE DETAIL

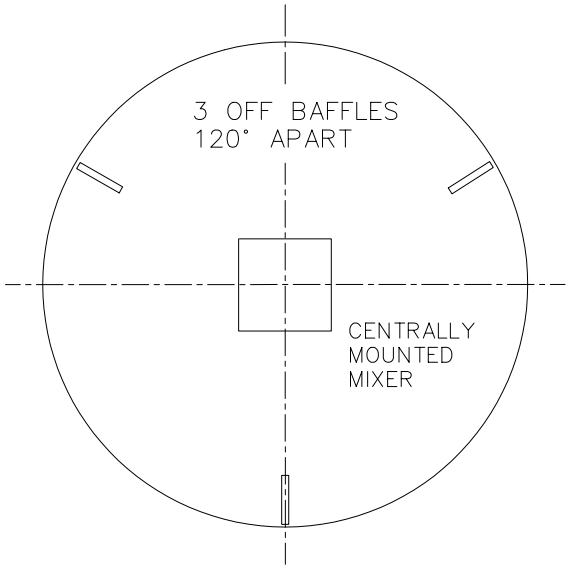

IN-TANK BAFFLE ARRANGEMENT

MIXER SPECIFICATION

MODEL TYPE	2000
MODEL No.	2097
POSITION	VERTICAL
kW RATING	12
OUTPUT SPEED (RPM)	45
SERVICE FACTOR	1.6
No. OF UNITS	3

MOTOR DETAILS

MOTOR kW	7.5
MOTOR VOLTAGE	415
MOTOR ENCLOSURE	IP66
FRAME SIZE	132
FRAME MATERIAL	CAST IRON
SPEED (RPM)	1455
SUPPLIED BY	MIXTEC

OTHER INFORMATION

MIXER	
MOTOR	TOSHIBA
PAINTING	Mixtec Std
PACKING	
TESTING	

SERIAL NUMBERS

MC3202 / 01 / 1 to 3

TANK INFORMATION

DIAMETER (m)	4.7
SHELL HEIGHT (m)	6.3
TOP	CLOSED
BOTTOM	FLAT
BAFFLE WIDTH	392
MIN TANK OPENING	1700
SEALING	YES
TYPE	P.GLAND
PRESSURE (kPaG)	0
TEMPERATURE (°C)	25

TANK DESIGN LOADS

MIXER MASS (kg)	414
BEND. MOMENT(Nm)	4664
TORQUE (Nm)	3502
AXIAL LOAD (N)	6094

TANK CONTENTS

PRODUCT	Slurry
S.G.	1.20
VISCOSITY (mPa.s)	2.5

CONSTRUCTION MAT'LS

STOOL	CS
DRY WELL	CS
COUPLING	CS
SHAFT	316 SS
IMPELLER HUBS	316 SS
IMPELLER BLADES	CS
BLADE COATING	BROMO BUTYL

IMPELLER DETAILS

	LOWER	MIDDLE	UPPER
IMPELLER TYPE	HA715	HA815	NONE
BLADES	BOLTED	BOLTED	
HUB	WELDED	WELDED	
STABILISERS	NO	NO	

CLIENT DETAILS

ORDER NUMBER 10821

TAG NUMBER 35 AGT 501/502/503

TECHNOLOGY TOP ◆ 100
SOUTH AFRICAN TECHNOLOGY FOR WORLD MARKETS 1991

MIXTEC SOLUTIONS
TEL. (08) 9249 2944 FAX. (08) 9249 2955

C O N F I D E N T I A L
DRAWINGS SUBMITTED SHALL REMAIN THE PROPERY OF MIXTEC AND ARE STRICTLY CONFIDENTIAL. THE INFORMATION CONTAINED HEREIN SHALL NOT BE DIVULGED TO THIRD PARTIES WITHOUT PRIOR WRITTEN CONSENT BY MIXTEC CC.

A	20/09/2012	RW	B		
1200 Drive height was 1302					

NOT TO SCALE		CLIENT APPROVAL	
DRAWN	P. DHARKAR	APPROVED	
CHECKED	DR	POSITION	
DATE	6 Jun 2012	DATE	

CLIENT: Midwest Vanadium

TITLE: AMV Precipitation Tank Agitators

DRG. No.: MC3202/01 – A